Micro power unit series HR080

210 bar

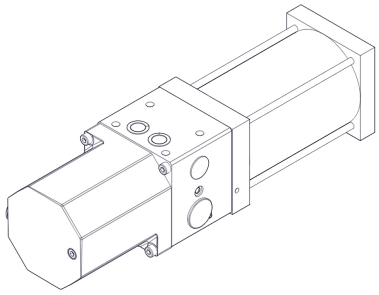

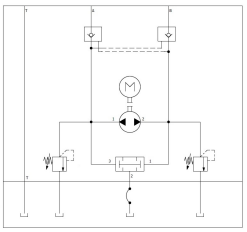

Product characteristics

The micro-hydraulic power unit HR080 provides high pressure in any mounting position. The pump rotation is reversible by inverting the motor direction: no directional valve necessary.

- thermal motor protection switch
- compatible with various actuators
- de-energized pressure holding by check valves

Table of Contents

Technical Data

General

Weight [kg]	Ambient temperature range [°C]	Tank capacity
4	-15 to +40	0.30 L tank volume 0.23 L effective volume

Hydraulic parameters

Hydraulic fluid: mineral oil according to DIN 51524, other media on request

Type of pump	Hydraulic fluid temperature [°C]	Viscosity [mm^2/s]	Tank pressure [bar]	Return flow rate	Permissible degree of pollution
Radial piston pump	-10 to +70	10 to 100	-0.2 to 2	maximum 1 L/min	max. class 9 according NAS1638

Electrical parameters - motor 12 V DC

Voltage	12 V DC
Power	P2 = 190 W
Duty cycle	Interval operation: S3-10 %
Electrical connection	vl...Contact pin AMP wh...Contact pin AMP bk...Double flat spring contact AMP
Ingress protection class	IP40 according to DIN40050

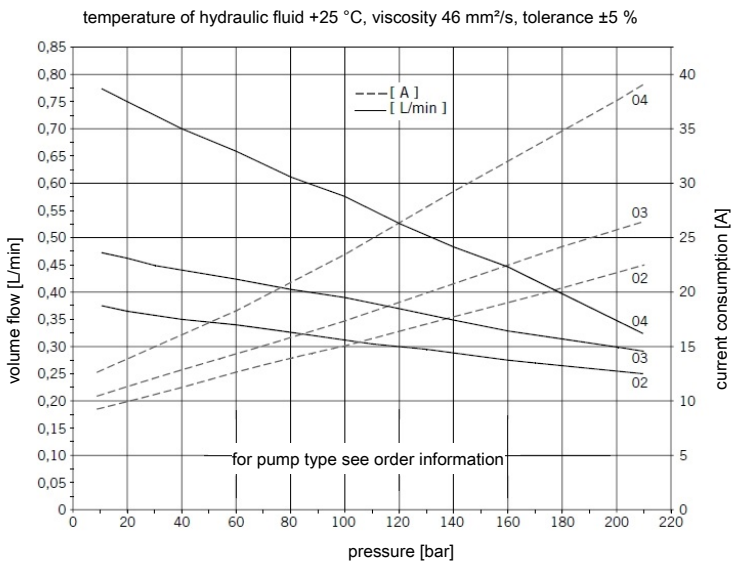

Electrical parameters - motor 24 V DC

Voltage	24 V DC
Power	P2 = 190 W
Duty cycle	Interval operation: S3-10 %
Electrical connection	wh…connector bk…connector
Ingress protection class	IP40 according to DIN40050

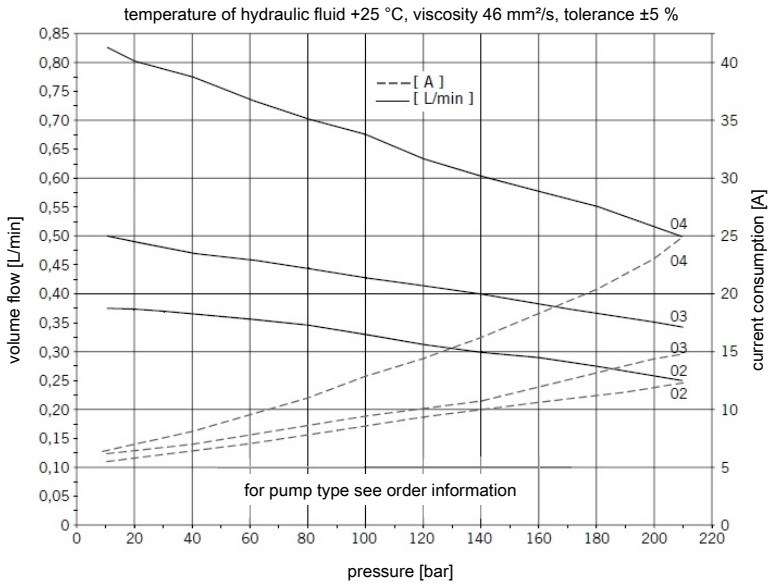

Electrical parameters - Motor 230 V AC, 1-phase

Voltage	230 V, 50/60 Hz
Power	P1 = 300 W
Speed	3000 min^{-1} at 50 Hz
Power consumption	Starting current: max. 4 A Rated current: max. 1.6 A
Capacitor	10 µF
Duty cycle	Interval operation: S3-10 %
Overload protection	Temperature switch opens at 140 °C (self-starting after cooling)
Electrical connection	Cables with ferrules
Ingress protection class	IP40 according to DIN40050

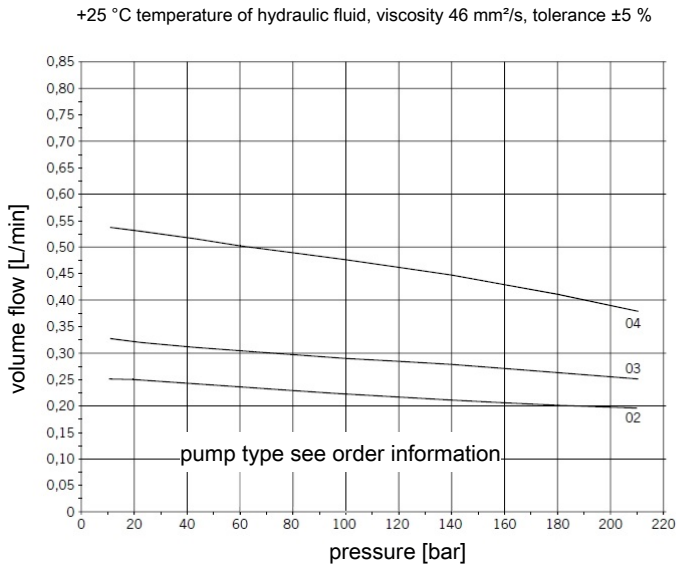

Electrical parameters - Motor 230 V and 400 V AC, 3-phase

Voltage /power consumption	220 – 240 V Δ; 50 Hz / 0.85 A 220 – 280 V Δ; 60 Hz / 0.5 A 380 – 420 V Y; 50 Hz / 0.55 A 440 – 480 V Y; 60 Hz / 0.5 A
Power	P1 = 300 W
Speed	3000 min^{-1} at 50 Hz
Duty cycle	Interval operation: S3-10 %
Overload protection	Temperature switch opens at 160 °C (self-starting after cooling)
Electrical connection	Cables with ferrules
Ingress protection class	IP44 according to DIN40050

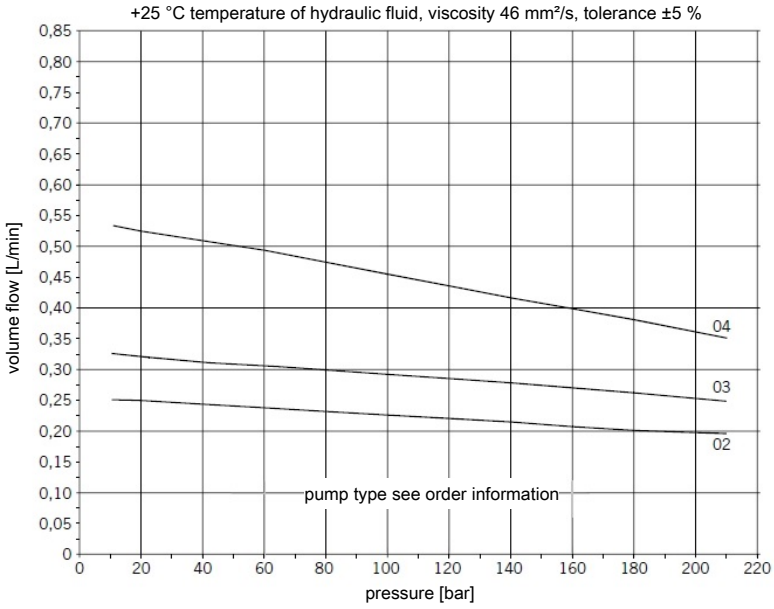

Electrical connections

Rotation direction of motor shaft


left-hand rotation*


right-hand rotation*

* viewed face to shaft

24 V DC

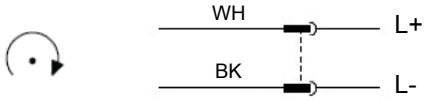

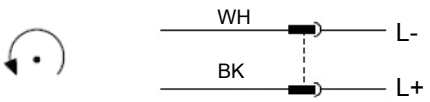

230 V AC

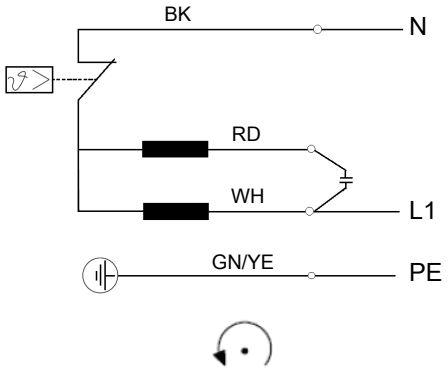

thermal winding cover
140° - internally wired

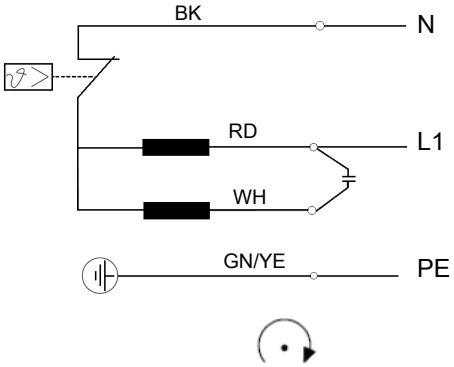

230 V AC Δ

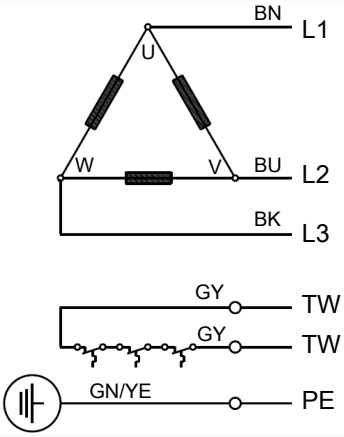

reverse direction of rotation : exchange L2 and L3

TW = thermal winding cover -> 160°

230 V AC Y / 400 V AC Y

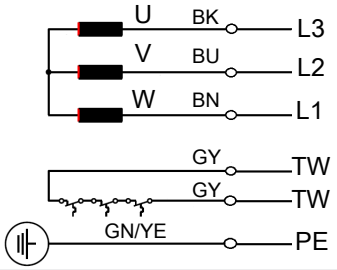

reverse direction of rotation: exchange L2 with L3

TW = thermal winding cover -> 160°

Hydraulic schematics

mounting plate HE71371A

power unit

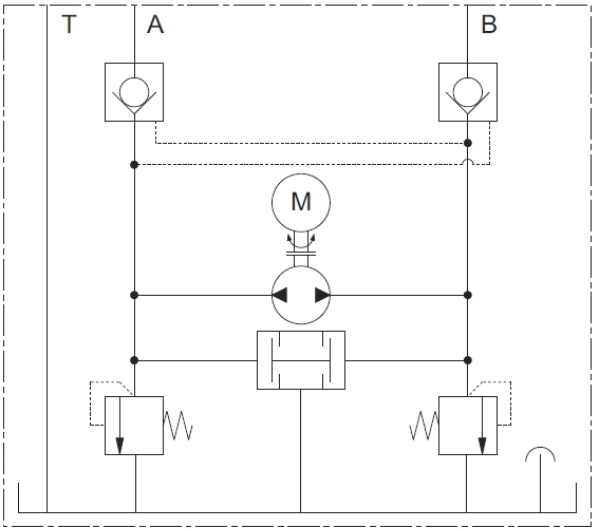

Dimensions and connections

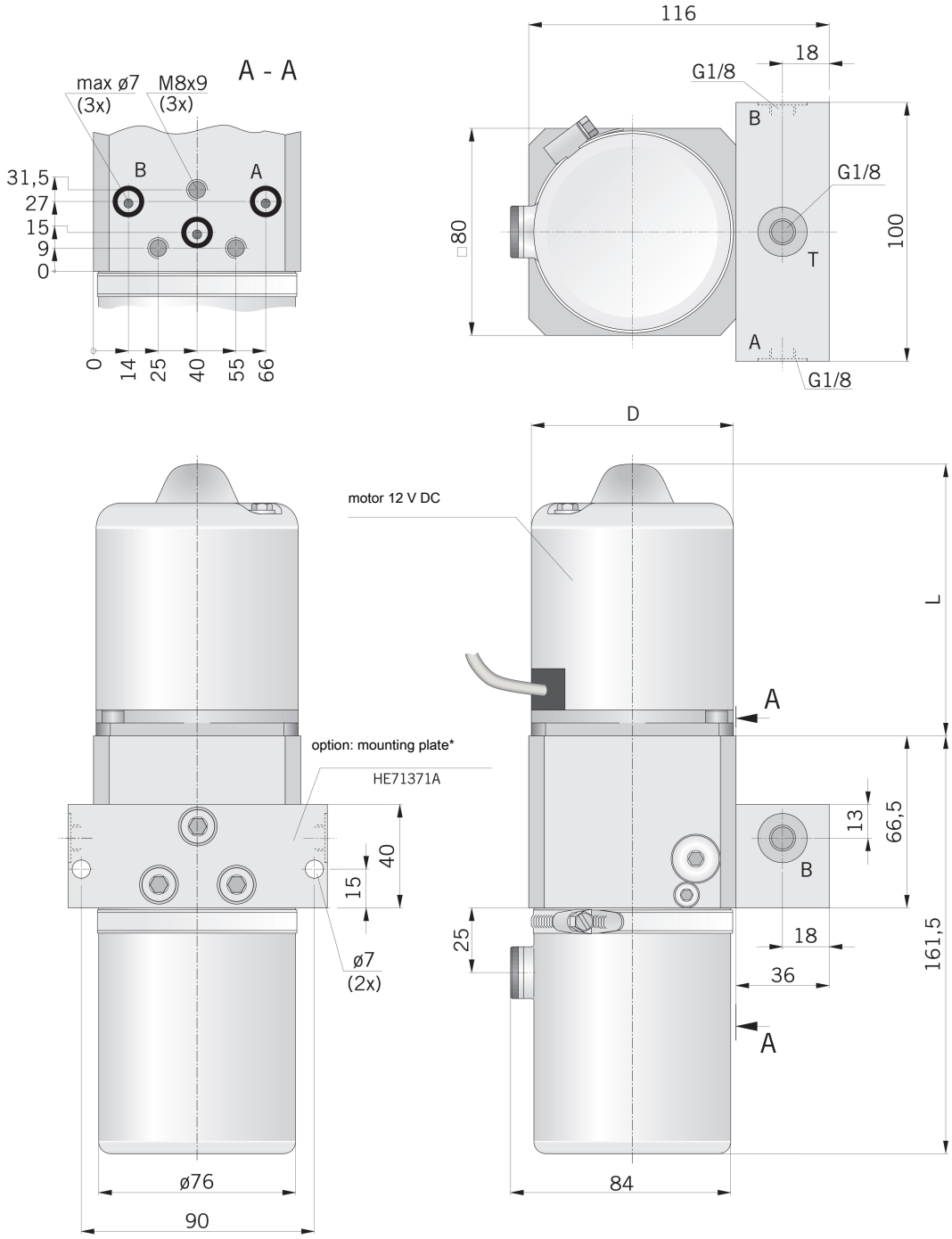

* not included in delivery

	L	D
12 V DC	106	76
24 V DC	106	76
230 V AC	123	80
230 V AC Δ 3-ph.	113	80
400 V AC Y 3-ph.	113	80

Order information

Type code

Ordering example		HR080 R1 E		02		D		3		1BK		4		O0	

Volume flow at 2800 rpm

02	0,24 L/min
03	0,32 L/min
04	0,52 L/min

Motor type

A	3-phase motor
W	alternating current motor
D	brush-type DC motor

Ingress protection class

4	IP40
5*	IP54
8*	IP44

*only for motor power supply 2 & 5

Motor power supply

1	230 V/1 Ph; 50/60 Hz
2	380-420 V Y; 50 Hz 440-480 V Y; 60 Hz
3	12 V DC
4	24 V DC
5	220-240 V Δ; 50 Hz 220-280 V Δ; 60 Hz